ELECTRO ADAPTER INC.
CHATSWORTH, CALIFORNIA, USA 91311
PHONE (818) 998-1198
FAX (818) 709-5773

SECTION 2 - MAGNEFORM TERMINATION SHRINK BOOT , STRAIN RELIEF , EMI/RFI , SHIELD SOCK SAE AS85049 CATEGORY 3B

Table 2 - Cable Entry Data

ENTRY ORDER NUMBER	Y ±.015 DIA.	Z ±.010 DIA.
03	.281	.188
04	.344	.250
05	.406	.312
06	.469	.375
07	.531	.438
08	.594	.500
09	.656	.562
10	.719	.625
11	.781	.688
12	.844	.750
13	.906	.812
14	.969	.875
15	1.031	.938
16	1.094	1.000

ENTRY ORDER NUMBER	Y ±.015 DIA.	Z ±.010 DIA.
17	1.156	1.062
18	1.219	1.125
19	1.281	1.188
20	1.344	1.250
21	1.406	1.312
22	1.469	1.375
23	1.531	1.438
24	1.594	1.500
25	1.656	1.562
26	1.719	1.625
27	1.781	1.688
28	1.844	1.750
29	1.906	1.812
30	1.969	1.875

WHEN MAXIMUM CABLE ENTRY EXCEEDS THE CONNECTOR INTERFACE DIAMETER, A 2 PIECE ADAPTER WILL BE SUPPLIED. ENTRY SIZES. CONSULT FACTORY FOR LARGER

Table 3 - Length Code Data

CONN CODE NUMBER	L MAX
18	1.250
21	1.250
32	1.750
40	1.250
41	1.250
54	1.250
61	1.500
76	1.250

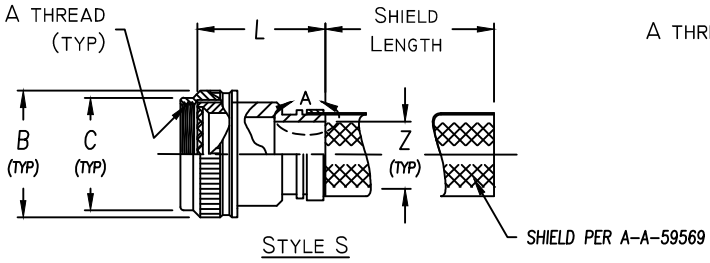

STYLE S

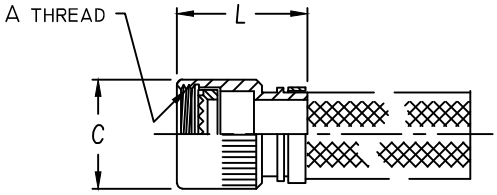

STYLE B

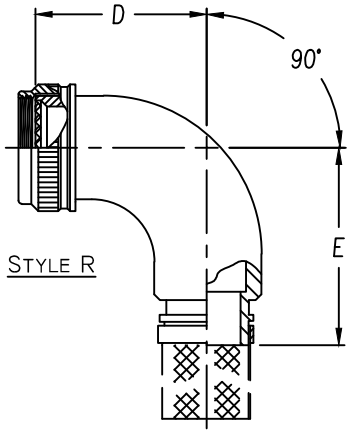

STYLE R

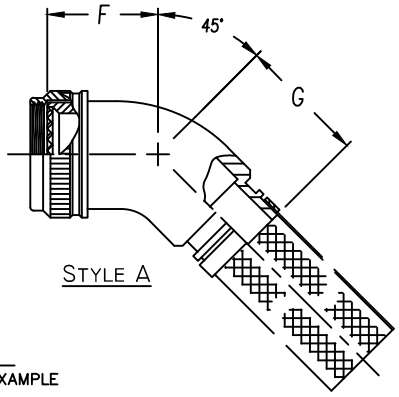

STYLE A

ASSEMBLY PART NUMBER

TO ESTABLISH YOU P/N, USE THE FOLLOWING EXAMPLE

E 4 1 1 1 S 2 3 0 8 2 0 6 B 5 1

- FUNCTION DESIGNATOR
  A–NON EMI ADAPTER
- CONNECTOR CODE NUMBER – TABLE 1 (6)
- SERIES PART NUMBER
- ADAPTER STYLE
  S = STRAIGHT SPIN COUPLING ADAPTER
  B = STRAIGHT BASIC ADAPTER
  R = 90° ADAPTER
  A = 45° ADAPTER
- ACCESSORY ORDER NUMBER–TABLE 1
- CABLE ENTRY DATA – TABLE 2
- SHIELD OPTION
  1 – SINGLE LAYER TINNED COPPER
  2 – DOUBLE LAYER TINNED COPPER
  3 – SINGLE LAYER SILVER COATED COPPER
  4 – DOUBLE LAYER SILVER COATED COPPER
  5 – ASSY. SUPPLIED WITH DRIVE BAND LESS SHIELD
  0 – NO SHIELDING OR DRIVE BAND REQUIRED.
- SHIELD LENGTH CODE
  SHIELD LENGTHS CHOSEN IN 1.00 INCH INCREMENTS (I.E. 08 = 8.00"). MIN LENGTH IS 3.00" CODE 03, MAX LENGTH IS 200" CODE 200(00 FOR NO SHIELD)
- GLAND & O'RING MATERIAL OPTION
  B – NEOPRENE & BUNA–N
  S – SILICONE
  N – NONE REQUIRED (NON ENVIROMENTAL)
- PLATING CODE NUMBER–TABLE 4 (6)
- MOD CODE (6)

Table 1 - Order Number Data

Accessory Order Number By Connector Code & Shell Size

ORDER NUMBER	18 (4) MS3100 SERIES MIL-DTL-5015 SOLDER CONTACT	21 MIL-DTL-26482 SERIES 1	32 (2) MIL-DTL-22992 CLASS C, J & R	40 (3) MIL-DTL-38999 SERIES III & IV	41 MIL-DTL-38999 SERIES I & II	54 MIL-DTL-5015 CRIMP MIL-DTL-26482 SER 2 MIL-DTL-83723 SER III		64 MIL-C-81703 NAS 1599 LITTON, VEAM, CIR SERIES	61 MIL-C-81511 SERIES 1, 2, 3 & 4 PATT 105, PATT 603 PATT 608	76	A UNIFIED THREAD	B MAX DIA.	C MAX DIA.	(7) D ±.125 DIM.	E MAX DIM.	(7) F ±.125 DIM.	G MAX DIM.	ORDER NUMBER
01	8S (B)										.375-32	.750	.531					01
03	8S (A)										.438-27	.812	.594					03
04	8S (C)	8			8, 9					8	.438-28	.812	.594	1.125	1.375	.812	1.062	04
05						8 & 8S					.500-20	.875	.656					05
06	10S (-)								8, A		.500-28	.875	.656					06
07				9, A							M12 x 1.0	.719	.656					07
08	10SL (C)	10			10, 11		3			10	.562-24	.844	.719					08
10	10SL(A,B), 12,12S(B,C)					10,10S,10SL		12			.625-24	1.000	.781	1.250	1.500	.875	1.125	10
11									10, B		.625-28	1.000	.781					11
12				11, B							M15 x 1.0	.844	.781					12
13	12 & 12S (A)	12			12, 13					12	.688-24	1.062	.844					13
15	14 & 14S (-)		12			12 & 12S	7	14			.750-20	1.125	.906	1.375	1.625	.938	1.188	15
16				13, C							M18 x 1.0	.969	.906					16
18		14			14, 15					14	.812-20	1.188	.969					18
19	16 & 16S (-)		14			14 & 14S	12	16			.875-20	1.250	1.031	1.500	1.750	1.000	.1250	19
20									14, D		.875-28	1.250	1.031					20
21				15, D							M22 x 1.0	1.094	1.031					21
23		16			16, 17					16	.938-20	1.312	1.094					23
24	18 (-)		16			16 & 16S	19	18			1.000-20	1.375	1.156	1.625	1.875	1.062	1.312	24
25									16, E		1.000-28	1.375	1.156					25
26				17, E							M25 x 1.0	1.219	1.156					26
28		18			18, 19	18	27			18	1.062-18	1.438	1.219					28
29	20 (-)		18					20			1.125-18	1.500	1.281					29
30	20 (R)										1.125-24	1.500	1.281	1.750	2.000	1.094	1.375	30
31									18, F		1.125-28	1.500	1.281					31
32				19, F							M28 x 1.0	1.344	1.281					32
34		20			20, 21	20	37			20	1.188-18	1.562	1.344					34
35	22 (-)		20					22			1.250-18	1.625	1.406	1.875	2.125	1.156	1.406	35
36									20, G		1.250-28	1.625	1.406					36
37				21, G							M31 x 1.0	1.469	1.406					37
39		22			22, 23	22				22	1.312-18	1.688	1.469					39
40	24 (-)		22					24			1.375-18	1.750	1.531	2.000	2.250	1.188	1.438	40
41									22, H		1.375-28	1.750	1.531					41
42				23, H							M34 x 1.0	1.594	1.531					42
44		24			24, 25	24				24	1.438-18	1.812	1.594					44
45							61				1.500-18	1.875	1.656					45
46									24, J		1.500-28	1.875	1.656	2.125	2.375	1.250	1.500	46
47				25, J							M37 x 1.0	1.719	1.656					47
48											1.562-18	1.938	1.719					48
49	28 (-)		24					28			1.625-18	2.000	1.781	2.375	2.625	1.344	1.625	49
51						28					1.750-18	2.125	1.906					51
52	32 (B,C)		28					32			1.875-16	2.250	2.031					52
53	32 (A,R)										1.906-18	2.281	2.062	2.625	2.875	1.438	1.688	53
54						32					2.000-18	2.375	2.156					54
55	36 (B)		32					36			2.062-16	2.469	2.219					55
56	36 (R)										2.062-24	2.469	2.219					56
57	36 (C)										2.125-16	2.500	2.281	2.875	3.125	1.562	1.812	57
58	36 (A)										2.125-18	2.500	2.281					58
59						36					2.250-16	2.625	2.406					59
60	40 (B)		36					40			2.312-16	2.719	2.469					60
61	40 (A,C)										2.375-16	2.750	2.531	3.125	3.375	1.688	1.938	61
62						40					2.500-16	2.875	2.656					62

NOTES: UNLESS OTHERWISE SPECIFIED.

1 THREADS ARE RIGHT HAND IN ACCORDANCE WITH FED-STD-H28, CLASS 2B.

(2) THREADS NOTED ARE LEFT HAND, CLASS 2B.

(3) THREADS NOTED ARE ISO METRIC, CLASS 6H.

(4) CODE 18 SHELL SIZES ARE FOLLOWED IN PARENTHESIS BY CONNECTOR MFR CODE. SEE CONNECTOR CODE 18 CHART AT RIGHT & EXAMPLE PART NUMBER FOR DETAILS.

5 TABLE 1 LISTS THE MOST USED CONNECTOR CODES. SEE SECTION 11 FOR OTHER CODES AVAILABLE AND COMPLETE CONNECTOR PART NUMBER CROSS REFERENCE.

(6) SEE SUPPORT DATA SECTION FOR PLATING AND MODIFICATION CODE OPTIONS.

(7) ADD .25 TO "D" & "F" FOR CONNECTOR CODES 30, 32 & 61.

(8) SEE SUPPORT DATA SECTION FOR TABLE V & AVAILABLE STYLES

(4) Connector Code 18 Chart

CONNECTOR CODE	CONNECTOR MANUFACTURER (MS3100, MS3101, MS3106 & MS3107)
A	AMPHENOL, CLASS A
B	BENDIX, CLASS A, E & R
C	CANNON, CLASS A, E & R
D	MFR. UNKNOWN, CLASS A, E & R
R	AMPHENOL, CLASS R
-	MFR. CODE NOT REQUIRED

ELECTRO ADAPTER INC.
CHATSWORTH, CALIFORNIA, USA 91311
PHONE (818) 998-1198
FAX (818) 709-5773

SECTION 2 - MAGNEFORM TERMINATION SHRINK BOOT , EMI/RFI , SHIELD SOCK , LOW PROFILE SAE AS85049 CATEGORY 1

E * * 32

Table 2 - Cable Entry Data

ENTRY ORDER NUMBER	Z ±.010 DIA.	ENTRY ORDER NUMBER	Z ±.010 DIA.
03	.188	17	1.062
04	.250	18	1.125
05	.312	19	1.188
06	.375	20	1.250
07	.438	21	1.312
08	.500	22	1.375
09	.562	23	1.438
10	.625	24	1.500
11	.688	25	1.562
12	.750	26	1.625
13	.812	27	1.688
14	.875	28	1.750
15	.938	29	1.812
16	1.000	30	1.875

WHEN MAXIMUM CABLE ENTRY EXCEEDS THE CONNECTOR INTERFACE DIAMETER, A 2 PIECE ADAPTER WILL BE SUPPLIED. CONSULT FACTORY FOR LARGER ENTRY SIZES.

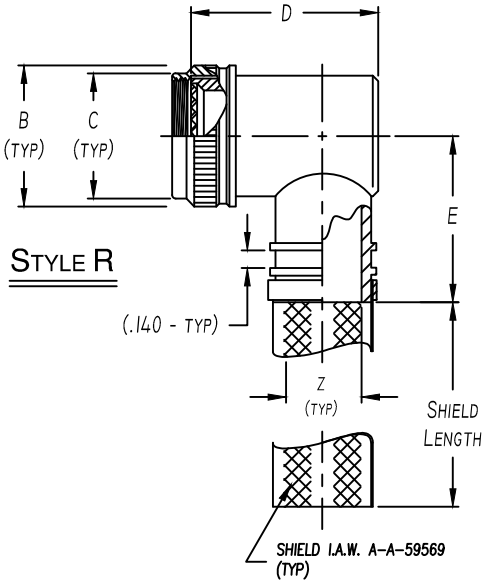

STYLE R

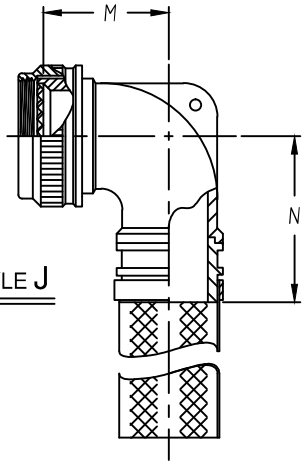

⑥ STYLE J

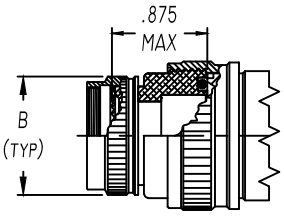

CONFIG FOR 2 PIECE

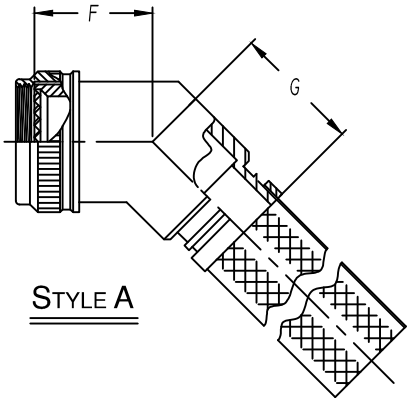

STYLE A

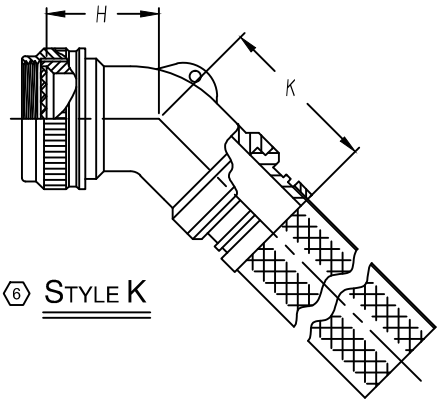

⑥ STYLE K

ASSEMBLY PART NUMBER

TO ESTABLISH YOU P/N, USE THE FOLLOWING EXAMPLE

E 41 32 R 23 08 1 06 S 51

- E — FUNCTION DESIGNATOR A–NON EMI ADAPTER
- 41 — CONNECTOR CODE NUMBER – TABLE 1 ⑥
- 32 — SERIES PART NUMBER
- R — ADAPTER STYLE
  - R = 90° ADAPTER
  - A = 45° ADAPTER
  - J = 90° ADAPTER (DIE–CAST)
  - K = 45° ADAPTER (DIE–CAST)
- 23 — ACCESSORY ORDER NUMBER–TABLE 1
- 08 — CABLE ENTRY ORDER NUMBER–TABLE 2
- 1 — SHIELD OPTION
  - 1 – SINGLE LAYER TINNED COPPER
  - 2 – DOUBLE LAYER TINNED COPPER
  - 3 – SINGLE LAYER SILVER COATED COPPER
  - 4 – DOUBLE LAYER SILVER COATED COPPER
  - 5 – ASSY. SUPPLIED WITH DRIVER BAND LESS SHIELD
  - 0 – NO SHIELDING OR DRIVE BAND REQUIRED.
- 06 — SHIELD LENGTH CODE
  - SHIELD LENGTHS ARE CHOSEN IN 1.00 INCH INCREMENTS (I.E. 08 = 8.00"). MINIMUM ORDER LENGTH IS 3.00" CODE 03 (00 FOR NO SHIELD). MAXIMUM ORDER LENGTH IS 200.00" CODE 200.
- S — GLAND & O'RING MATERIAL OPTION
  - B – NEOPRENE & BUNA–N
  - S – SILICONE
  - N – NONE (NON ENVIROMENTAL)
- 51 — PLATING CODE NUMBER–TABLE 4 ⑥
- MOD CODE ⑥

Table 1 - Order Number Data

Accessory Order Number By Connector Code & Shell Size

ORDER NUMBER	18 (4) MS3100 SERIES MIL-DTL-5015 SOLDER CONTACT	21 MIL-DTL-26482 SERIES 1	32 (2) MIL-DTL-22992 CLASS C, J & R	40 (3) MIL-DTL-38999 SERIES III & IV	41 MIL-DTL-38999 SERIES I & II	54 MIL-DTL-5015 CRIMP MIL-DTL-26482 SER 2 MIL-DTL-83723 SER III		64 MIL-C-81703 NAS 1599 LITTON, VEAM, CIR SERIES	61 MIL-C-81511 SERIES 1, 2, 3 & 4	76 PATT 105, PATT 603 PATT 608	A UNIFIED THREAD	B MAX DIA.	C MAX DIA.	D (7) MAX DIM.	E MAX DIM.	F (7) ±.125 DIM.	G MAX DIM.	H MAX DIM.	K MAX DIM.	M MAX DIM.	N MAX DIM.	ORDER NUMBER
01	8S (B)										.375-32	.750	.531	1.031		.500						01
03	8S (A)										.438-27	.812	.594	1.094	1.188	.500						03
04	8S (C)	8			8, 9					8	.438-28	.812	.594	1.000		.750		.457	1.710	.500	1.730	04
05						8 & 8S					.500-20	.875	.656	.938		.719	1.062	.457	1.710	.500	1.730	05
06	10S (-)								8, A		.500-28	.875	.656	1.562		1.062						06
07				9, A							M12 x 1.0	.719	.656	.938	1.250	.500		.457	1.710	.500	1.730	07
08	10SL (C)	10			10, 11		3			10	.562-24	.844	.719	1.375		.750		.520	1.770	.595	1.850	08
10	10SL(A,B), 12,12S(B,C)					10,10S,10SL		12			.625-24	1.000	.781	1.562	1.312	1.062	1.094	.520	1.770	.595	1.850	10
											.625-28	1.000	.781	1.688		1.062						11
11									10, B		M15 x 1.0	.844	.781	1.125		.500		.520	1.770	.595	1.850	12
12				11, B							.688-24	1.062	.844	1.500		.750		.582	1.830	.610	1.870	13
13	12 & 12S (A)	12			12, 13					12	.750-20	1.125	.906	1.812		.875		.582	1.830	.610	1.870	15
15	14 & 14S (-)		12			12 & 12S	7	14			M18 x 1.0	.969	.906	1.188	1.375	.562	1.125	.562	1.830	.610	1.870	16
16				13, C							.812-20	1.188	.969	1.500		.812		.645	1.920	.700	1.940	18
18		14			14, 15					14	.875-20	1.250	1.031	1.875		.750		.645	1.920	.700	1.940	19
19	16 & 16S (-)		14			14 & 14S	12	16			.875-28	1.250	1.031	1.938	1.438	1.125						20
20									14, D		M22 x 1.0	1.094	1.031	1.312		.562		.645	1.920	.700	1.940	21
21				15, D							.938-20	1.312	1.094	1.625		.875		.738	2.030	.885	2.030	23
23		16			16, 17					16	1.000-20	1.375	1.156	2.000		.719		.738	2.030	.885	2.030	24
24	18 (-)		16			16 & 16S	19	18			1.000-28	1.375	1.156	2.062	1.500	1.156						25
25									16, E		M25 x 1.0	1.219	1.156	1.438		.594	1.188	.738	2.030	.885	2.030	26
26				17, E							1.062-18	1.438	1.219	1.688		.875		.926	2.220	.975	2.200	28
28		18			18, 19	18	27			18	1.125-18	1.500	1.281	2.156		.938						29
29	20 (-)		18					20			1.125-24	1.500	1.281	1.938	1.562	.625						30
30	20 (R)										1.125-28	1.500	1.281	2.125		1.188						31
31									18, F		M28 x 1.0	1.344	1.281	1.500		.625		.926	2.220	.975	2.200	32
32				19, F							1.188-18	1.562	1.344	1.812		.875		.926	2.220	.975	2.200	34
34		20			20, 21	20	37			20	1.250-18	1.625	1.406	2.250		.938						35
35	22 (-)		20					22			1.250-28	1.625	1.406	2.250	1.625	1.250	1.219					36
36									20, G		M31 x 1.0	1.469	1.406	1.625		.688		.926	2.220	.975	2.200	37
37				21, G							1.312-18	1.688	1.469	1.938		.938		1.020	2.370	1.125	2.310	39
39		22			22, 23	22				22	1.375-18	1.750	1.531	2.375		1.000						40
40	24 (-)		22					24			1.375-28	1.750	1.531	2.375		1.250						41
41									22, H		M34 x 1.0	1.594	1.531	1.750		.656	1.250	1.020	2.370	1.125	2.310	42
42				23, H							1.438-18	1.812	1.594	2.000		1.000		1.020	2.370	1.125	2.310	44
44		24			24, 25	24				24	1.500-18	1.875	1.656	1.875	1.688	.938	1.438					45
45							61				1.500-28	1.875	1.656	2.500		1.250						46
46									24, J		M37 x 1.0	1.719	1.656	1.875		.688	1.250	1.020	2.370	1.125	2.310	47
47				25, J							1.562-18	1.938	1.719	2.125		1.062						48
48											1.625-18	2.000	1.781	2.500	1.812	1.250	1.312					49
49	28 (-)		24					28			1.750-18	2.125	1.906	2.062		.938						51
51						28					1.875-16	2.250	2.031	2.750	1.938	1.125	1.344					52
52	32 (B,C)		28					32			1.906-18	2.281	2.062	2.438		.750						53
53	32 (A,R)										2.000-18	2.375	2.156	2.312		.969						54
54						32					2.062-16	2.469	2.219	3.000		.969						55
55	36 (B)		32					36			2.062-24	2.469	2.219	1.875	2.062	.812	1.406					56
56	36 (R)										2.125-16	2.500	2.281	1.875		.812						57
57	36 (C)										2.125-18	2.500	2.281	1.875		.812						58
58	36 (A)										2.250-16	2.625	2.406	2.438		1.031						59
59						36					2.312-16	2.719	2.469	3.250	2.188	1.000	1.438					60
60	40 (B)		36					40			2.375-16	2.750	2.531	2.000		.875						61
61	40 (A,C)										2.500-16	2.875	2.656	2.688	2.750	1.125	1.500					62

NOTES: UNLESS OTHERWISE SPECIFIED.

1 THREADS ARE RIGHT HAND IN ACCORDANCE WITH FED-STD-H28, CLASS 2B.

(2) THREADS NOTED ARE LEFT HAND, CLASS 2B.

(3) THREADS NOTED ARE ISO METRIC, CLASS 6H.

(4) CODE 18 SHELL SIZES ARE FOLLOWED IN PARENTHESIS BY CONNECTOR MFR CODE. SEE CONNECTOR CODE 18 CHART AT RIGHT & EXAMPLE PART NUMBER FOR DETAILS.

5 TABLE 1 LISTS THE MOST USED CONNECTOR CODES. SEE SECTION 11 FOR OTHER CODES AVAILABLE AND COMPLETE CONNECTOR PART NUMBER CROSS REFERENCE.

(6) SEE SUPPORT DATA SECTION FOR PLATING AND MODIFICATION CODE OPTIONS.

(7) ADD .25 TO "D" & "F" FOR CONNECTOR CODES 30, 32 & 61.

(8) SEE SUPPORT DATA SECTION FOR TABLE V & AVAILABLE STYLES

(4) Connector Code 18 Chart

CONNECTOR CODE	CONNECTOR MANUFACTURER (MS3100, MS3101, MS3106 & MS3107)
A	AMPHENOL, CLASS A
B	BENDIX, CLASS A, E & R
C	CANNON, CLASS A, E & R
D	MFR. UNKNOWN, CLASS A, E & R
R	AMPHENOL, CLASS R
-	MFR. CODE NOT REQUIRED